DK8

PRODUCT DATA SHEET

Jūrmalas Mežaparki Ltd.
1 Garkalnes street, Jurmala
+371 299 006 03, www.jmp.lv

The play complex is made of robinia logs, ropes, galvanized and stainless steel, rubber and plastic parts.



MAX
1
children

6 AGE 14
6 +
age

2 m
1 m
1,40 m
height of fall

kg
90 kg
(heaviest part)

kg
410 kg

h
5 h
(without excavation and concreting)

2 m
1 m
4000 x 170 x 170 mm
overall dimensions
of the largest part

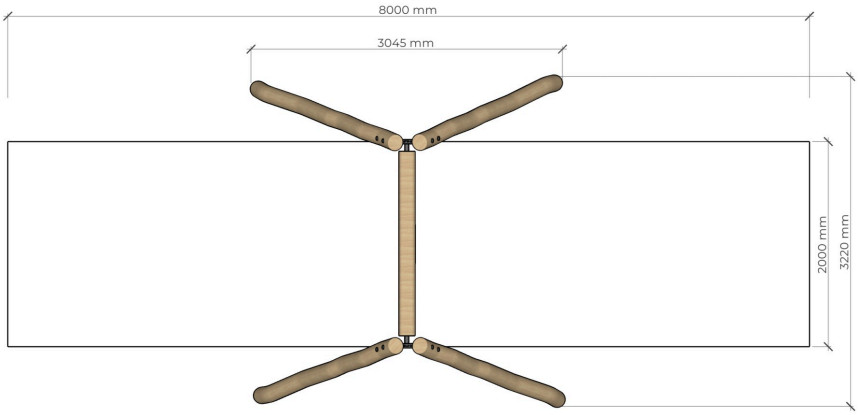

Lenght: 3045 mm
Width: 3220 mm
Height: 2675 mm

Lenght of safety area: 8000 mm
Width of safety area: 2000 mm
Required safety area: 15,67 m^2
(Install shock absorbing material according to EN 1176-1)

Playground equipment steel foundation is concreted in the ground at the planned location. The equipment can be used after two days when the concrete becomes solid. During assembly no children are allowed in the area. Foundation should be accessable for maintenance.
Playground equipment with free height of fall of more than 600 mm and/or equipment causing a force movement on the body of the user, shall be impact attenuating surfacing over the entire impact area.
Equipment safety checkings must be performend once in a week in high vandalism risk area.
Maintainance is required once in every 3 months, depending on usage.

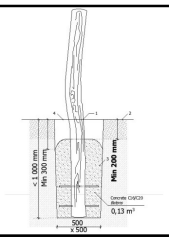

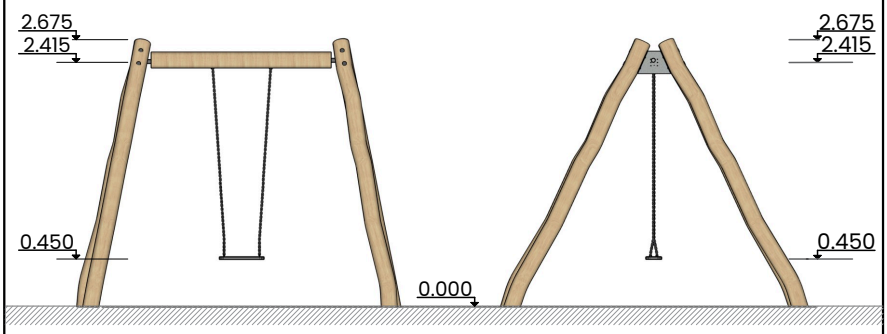

Transportation:

Spare parts:
All needed spare parts and elements, when warranty time expires can be ordered in Jūrmalas Mežaparki Ltd., and all the goods will be ready for delivery in 5 working days.

According to EN 1176-1