SE904

PRODUCT DATA SHEET

Jūrmalas Mežaparki Ltd.
1 Garkalnes street, Jurmala
+371 299 006 03, www.jmp.lv

Construction is made from stainless and galvanized steel metal, plywood and HPL laminate details.

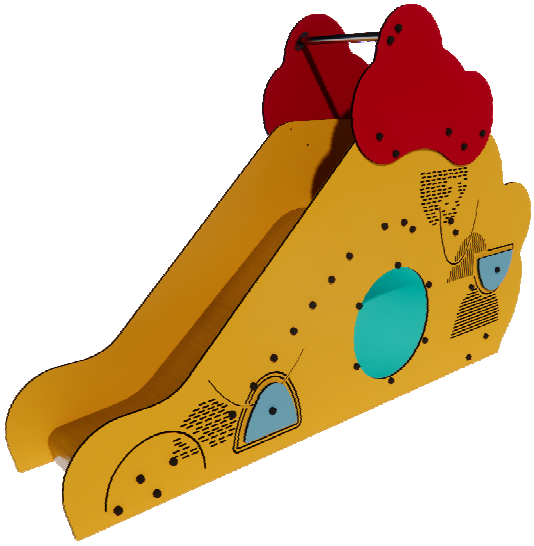

2
children

< 6
age

0,80 m
height of fall

44,10 kg
(heaviest part)

152 kg

1h
(without excavation and concreting)

1190 x 10 x 2574 mm
overall dimensions
of the largest part

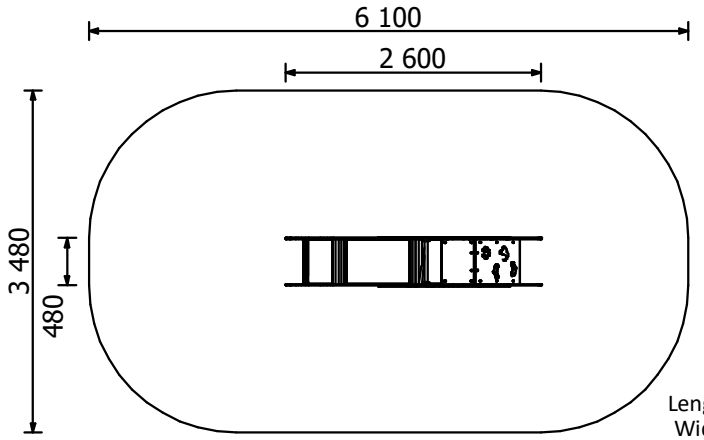

Lenght: **2 600 mm**
Width: **480 mm**
Height: **1 650 mm**

Lenght of safety area: **6 100 mm**
Width of safety area: **3 480 mm**
Required safety area: **19,32 m²**
(Install shock absorbing material according to EN 1176:2017)

Do not place stainless steel slide directly to south!

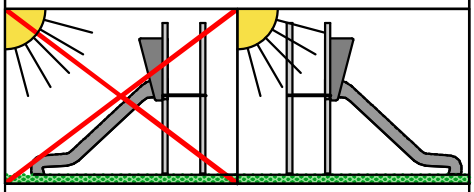

Foundation should be accessable for maintenance.

Playground equipment steel foundation is concreted in the ground at the planned location. The equipment can be used after two days when the concrete becomes solid. During assembly no children are allowed in the area. Foundation should be accessable for maintenance.

Playground equipment with free height of fall of more than 600 mm and/or equipment causing a force movement on the body of the user, shall be impact attenuating surfacing over the entire impact area.

Equipment safety checkings must be performend once in a week in high vandalism risk area.
Maintainance is required once in every 3 months, depending on usage.

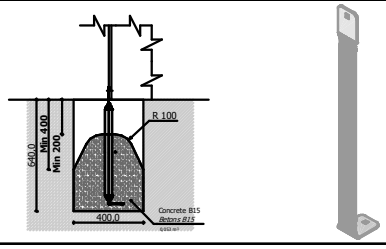

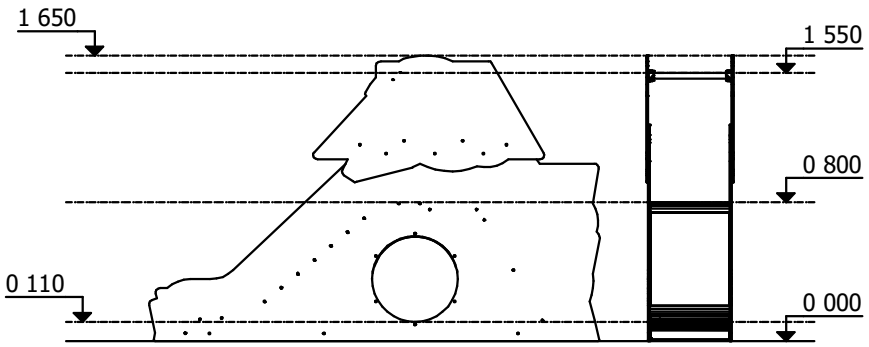

Transportation:

1 (one) palette:
2 100 x 1 000 x 500 mm

Spare parts:

All needed spare parts and elements, when warranty time expires can be ordered in Jūrmalas Mežaparki Ltd., and all the goods will be ready for delivery in 5 working days.

According to EN 1176-1

Manufactured according:
07.11.2019.

ISO 9001 BUREAU VERITAS Certification