WRK20

PRODUCT DATA SHEET

Jūrmalas Mežaparki Ltd.
1 Garkalnes street, Jurmala
+371 299 006 03, www.jmp.lv

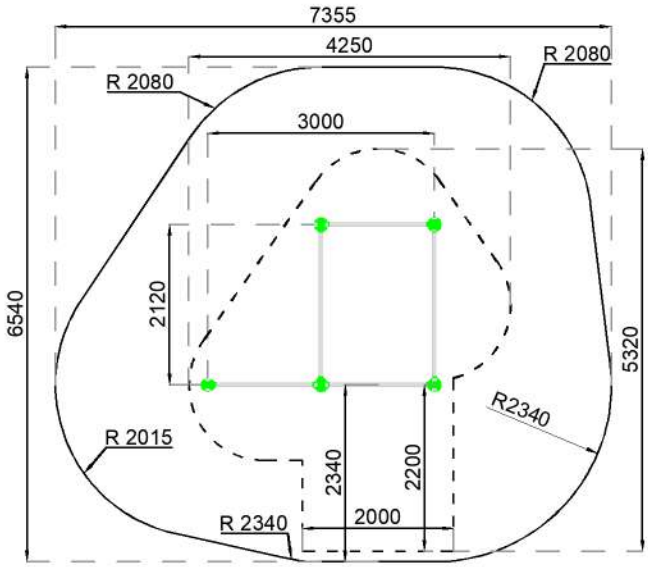

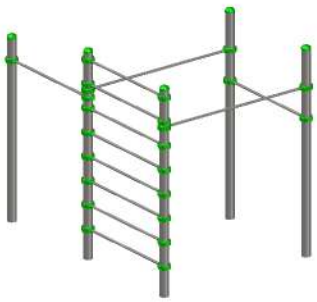

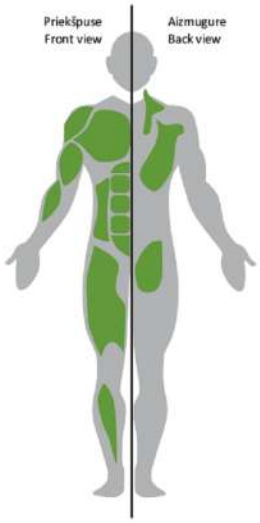

Minimum required safety zone - 38.99 m^2

Length:	3 000 mm
Width:	2 120 mm
Height:	2 700 mm
Safety Area Length:	7 355 mm
Safety Area Width:	6 540 mm
Safety Area:	38.99 m^2



3 users

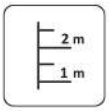

Critical height of fall
H = 2.59 m

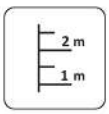

Required user height
from 1.40 m

Metal gymnastic complex is intended for public use outdoors.

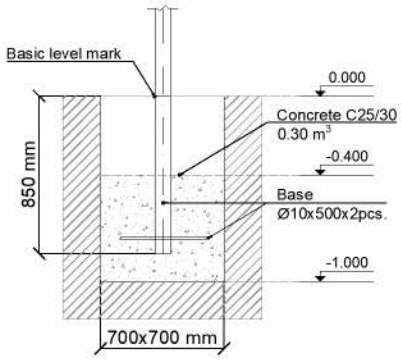

Gymnastic equipment is stablished by concreting the steel foundation in planned equipment location.
Equipment is suitable for use after two days of concreting when the foundation is totally solid.
During assembly no children are allowed in the area.
Equipment safety checks must be performed once a week in high vandalism risk areas.
Maintenance is required once in every 3 months, depending on usage

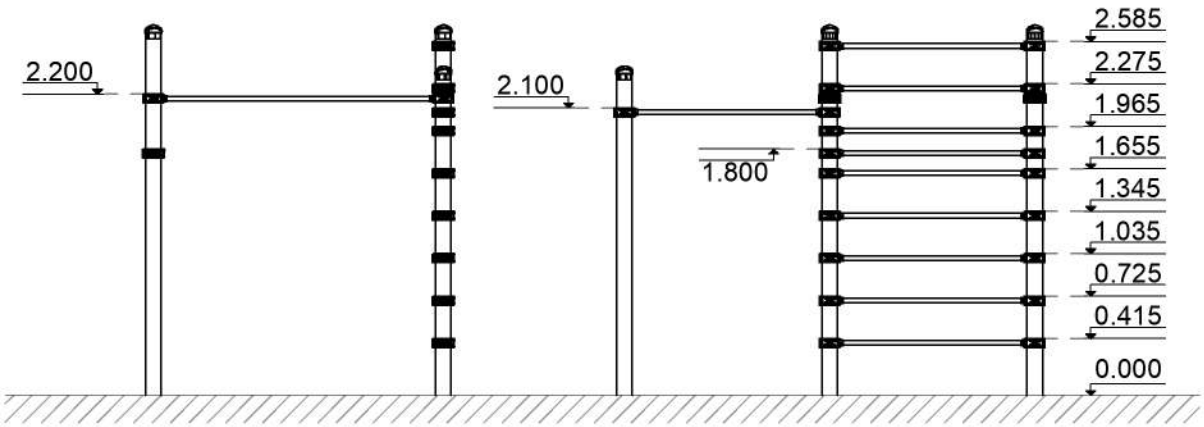

According to Standard LVS EN 16630:2015

Manufactured according: